MECHANICAL COMBINATION LOCK

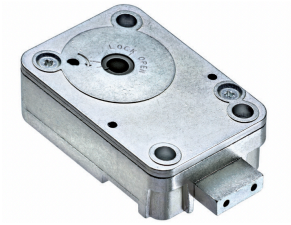

Mechanical lock is a 3-wheel anti-manipulation lock. Mounting pattern follows industry standard. The lock can be fitted in any direction (RH, LH, VU, VD).

General information

Lock dimensions: 85mm x 61mm x 29mm.

Bolt dimensions: 25mm x 8mm con due fori M4. Bolt throw: 8mm.

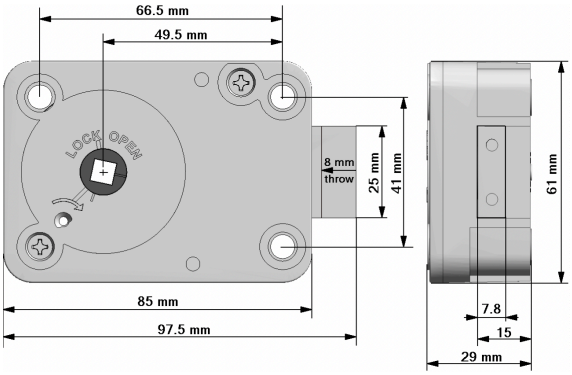

Holes are supplied in bolt end to cater for boltwork extensions: the load on the bolt must not exeed 8N.

Mounting instructions

Lock is provided with bolt in open position, ready for mounting.

Do not move the cam or the bolt. During installation bolt must be in open position and cam must be aligned as shown in the picture.

Put the star washer on the dial plate as shown in the picture.

The lock is supplied with 3 M6 (or US 1/4 20G BSW) screws. Tap mounting holes according to screws. Fasten lock with supplied screws: maximum torque 3.5Nm. Always use Lock- Tite or equivalent on mounting screws and bolt attachment screws.

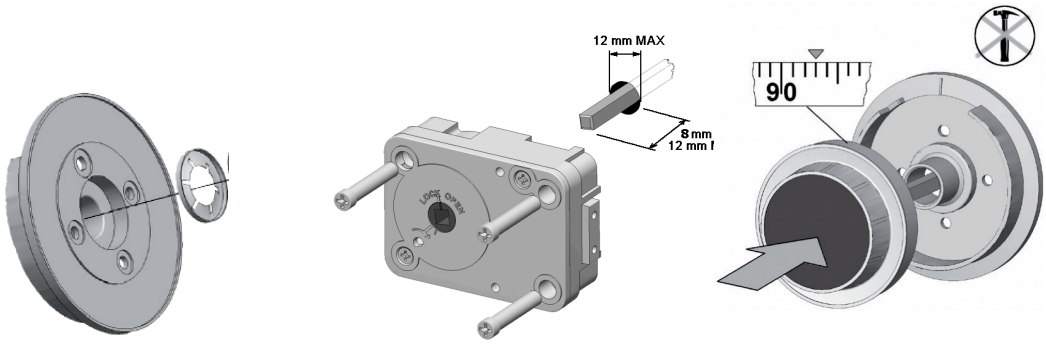

Cut the shaft to the needed lenght and fix it to the dial with the provided screw.

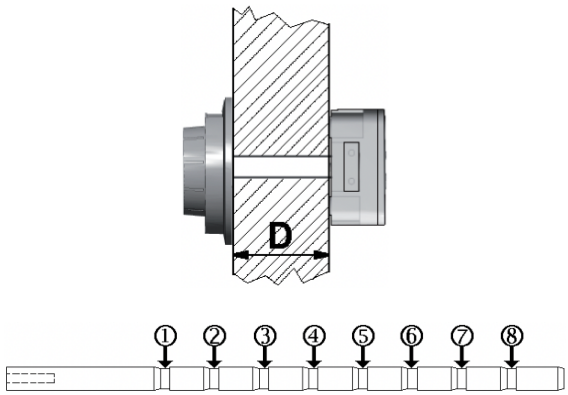

Distance D less than		Cut groove
23mm	0.9in	1
36mm	1.4in	2
48mm	1.9in	3
61mm	2.4in	4
74mm	2.9in	5
87mm	3.4in	6
100mm	3.9in	7
112mm	4.4in	8

Mount the dial mounting plate on the safe door.

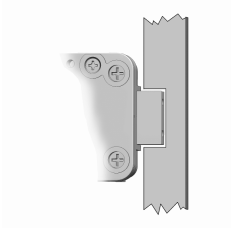

With the bolt retracted, align number 93 with the opening mark and gently push the dial into the
lock. Thanks to the star washer it will be now not possible to pull out the shaft.
Turn the dial counter-clockwise to close the lock.
In the locked position, there should be approximately 1mm clearance between the lock bolt and the cavity in the blocking bar of the boltwork. The lock bolt must move freely into the cavity.
Lock is provided with default code "50".
To open the lock turn the dial counter-clockwise, pass "50" **three times** and
stop on the opening mark the **fourth time**.
Note: due to installation tolerances it is possible that the code may have shifted up to 2 numbers up or down. This shifting is normal and will be eliminatedconce the code is re-set. If the lock doesn't open on "50", try to open with "48", then "49", "51" or "52".
Due to these tolerances it is important to re-set the code after installation.
With door open, close the lock and safe boltwork.
Dial the code on the changing mark.
Insert the change key carefully into the lock and rotate it about 90° clockwise.
Do not force the change key: if the key does not enter far enough to the end position it will not turn. Remove the key and repeat the procedure.
A damaged or bent change key can lead to a situation where the new code does not exactly match with the code dialed.
Change the default code to a new code, for instance 10-20-30.
The last number of the combiantion must be higher than 20.
Each number of the combination must be at least 4 numbers apart from the previous number.

- Turn the dial counter-clockwise, pass "10" **three times** and stop on the changing mark the **fourth time**.
- Turn the dial clockwise, pass "20" **two times** and stop on the changing mark the **third time**.
- Turn the dial counter-clockwise, pass "30" **one time** and stop on the changing mark the **second time.**

What if bolt or cam have been moved before the installation?
If the dial is turned too far start again from the beginning.
Rotate the change key counter-clockwise and remove it: the new code has been set.
Try the new code several times (on the opening mark) before the safe door is closed. Paste on the label on the dial.

As long as the default code "50" has not been changed the bolt can be retracted as follows:
• Hold the lock lid up and bolt to the right.
• Turn the cam at least 4 times clockwise and stop when cam is in the position
shown in figure 1.
• Turn the cam counterclockwise until the bolt is retracted. The mark on the cam
4x is now aligned with the open mark on lock housing as shown in figure 2.

What if the dial turns tight, or slides on the dial mounting plate?
Loosen the screw fixing the shaft on the dial and pull the dial slightly forward. Tighten the screw slightly. Do not overtighten the screw otherwise the dial will be pushed again toward the mounting plate.